SONAS BATHROOMS

PRODUCT DATA SHEET

10-03-2021

ASTRID Style

800mm Diameter Round Mirror

Black aluminium frame with Colour temperature changing LED.
Decorative adjustable black strap.

MATERIAL	5mm Copper Free with safety film backing
PRODUCT DIMENSIONS	See technical drawing below
FIXING	Template and fixings included
WATTAGE	23w
LUMENS	690Lm
LED TEMP(K)	3000/4500/6000k
CABLE LENGTH	1000mm
DE-MISTER WATTAGE	17w
ENERGY RATING	A Rated Energy efficient LED lights
SWITCH	Mirror Touch switch with colour temperature change 6000k - 3000k
WEIGHT	7kg
APPROVALS	CE approved, IP44, LVD, EMC, RoHS

For a full range of products please refer to www.sonasbathrooms.com

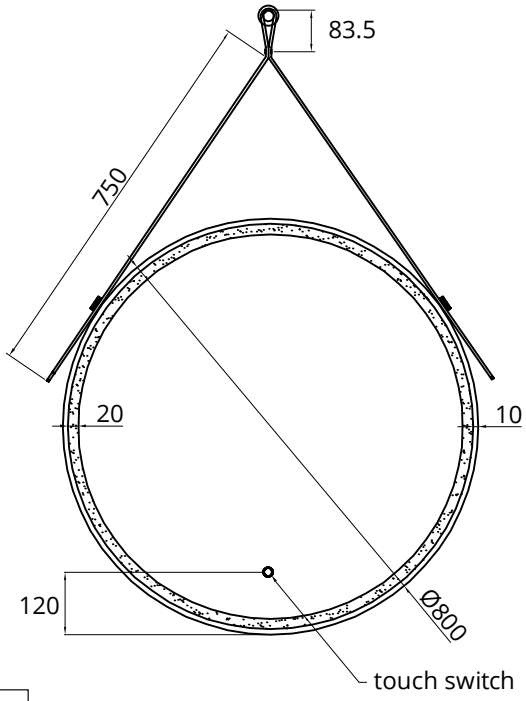

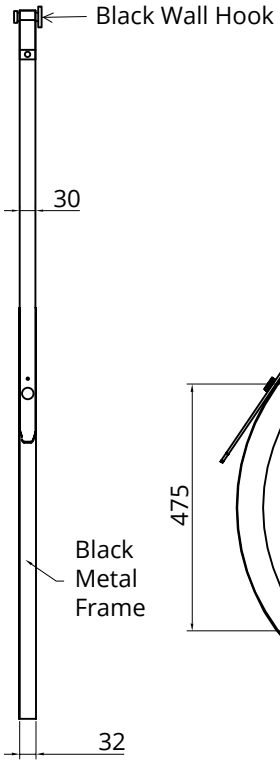

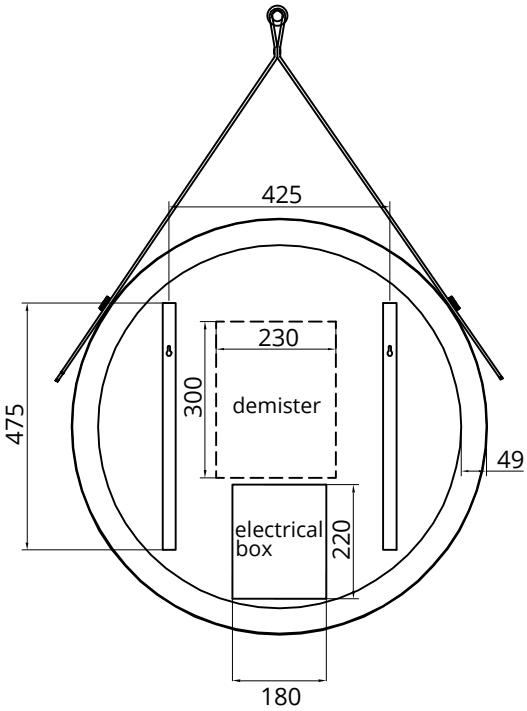

CE

All measurements shown are in millimetres. Drawing sizes are not to scale. Measurement accuracy ±5mm.
SONAS Bathrooms reserves the right to make changes and/or modifications to products and specifications without prior notice.